6 inch wall type intelligent central control specification

Version Number	Content	Enact	Time
V1.0	Initial Version	Process Engineering	2023-3-31

Catalogue

Chapter 1 Product introduction.....1-3pages

1.1 Appearance view.....2page

1.2 Product features and application scenarios.....2page

1.3 Packing list.....3page

Chapter 2 Product function and configuration.....3-7pages

2.1 Parameter configuration.....3page

2.2 Function introduction.....4page

Chapter 3 Interface and specification parameters.....5-7pages

3.1 Function interface and description.....5page

3.2 Interface specification.....6-7pages

Chapter 4 Installation instructions.....8-9pages

4.1 Installation instruction.....8-9pages

Chapter 5 Basic usage instructions.....9-15pages

5.1 Safety instruction*****.....9page

5.2.1-5.2.10 Product operation instructions.....10-15pages

Chapter 6 Warranty description.....16page

Chapter 1 Product introduction

1.1 Appearance view

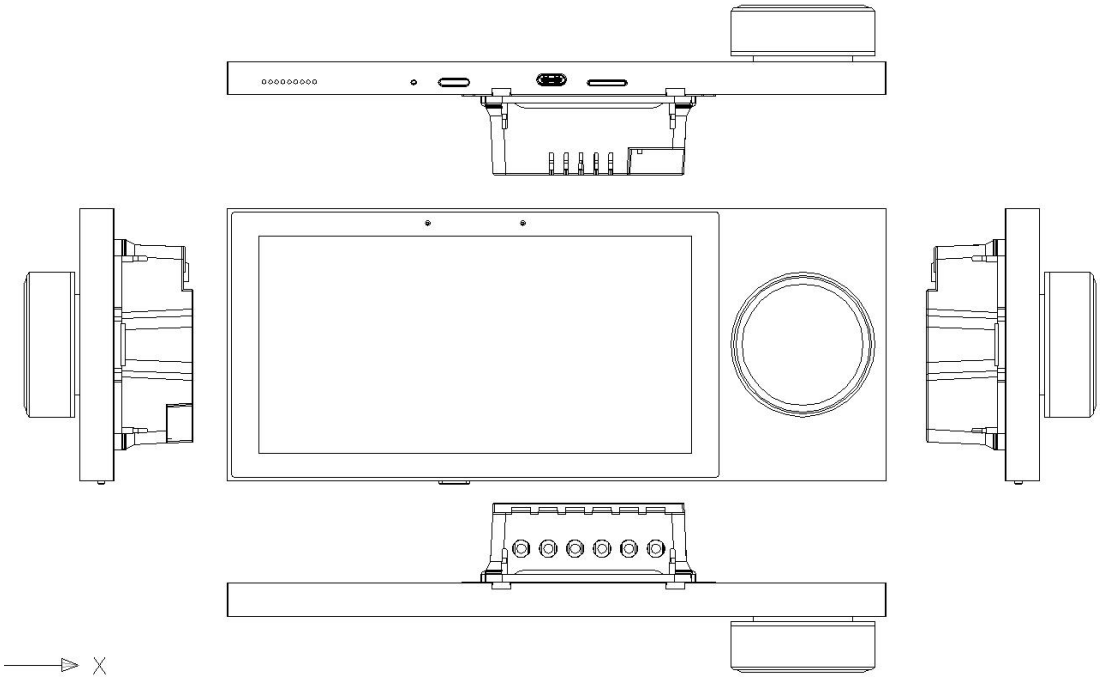

1.2 Product features and application scenarios

● 86 Into the wall type hidden installation structure, easy installation mode, no need to transform the wall, any collocation.

● 6-inch HD LCD, G+FF process multi-touch, and switch ratio at the same height

● With its own knob design, by pressing the switch equipment, through the knob rotation to adjust the lights, curtains, volume and other equipment.

● Smart home interconnection, situational mode, Zigbee gateway function, device automation, remote APP control.

● It can easily realize the precise control of intelligent devices such as lights, curtains, air conditioners, etc., without hands, compatible with some TUYA

ecological devices.

● You can customize a linkage scenario to quickly change the scenario mode.

1.3 Packing list

A copy of instructions
2 PCS screws
Mounting bracket

Chapter 2 Product function and configuration

2.1 Parameter configuration

Parameter configuration			
CPU	Quad-core Cortex 1.5GHZ	**Firmware**	Android8.1
RAM	2G	**Screen**	6-inch 1440*720 multi-touch
ROM	8G	**Relay**	Single channel ≦2*200W
Wired network	10M/100M adaptive Ethernet	**RS485**	Half-duplex 3.5MM interface terminal
WIFI	802.11b/g/n wireless protocol 150Mbps 2.4GHz	**Zigbee**	802.15.4 PHY/MAC Zigbee network protocol stack
power input	AC100~240V ,50/60Hz	**Knob screen**	1.28 inch knob color screen
Speaker output	2* (10-25W) (MAX) (depending on selected	**Power amplifier**	Frequency response: 20Hz-20Khz SNR: 98dB

Intelligent music central control host

	hardware)	**parameter**	
Output impedance	4-8Ω	**Weight**	0.55KG
Product size	208*86*55.3MM	**Way to install**	86 Wall installation UK
Wireless protocol	Wi-Fi ,Bluetooth ,Zigbee		
Operating temperature	0℃~40℃		
Operating humidity	5% to 90%RH non-condensing		
Functional support			
Gateway function	Zigbee gateway capability, can connect 50+ sub-devices, multi-category TUYA ecological equipment control.		
Local switch	Support local 2-way switch, can be used for room lighting line use, such as living room lights, bookcase lights, etc		
Music's play	Support voice on-demand online music, Bluetooth, TF card, U disk, AUX play music.		

2.2 Function introduction

1、This product supports smart home control (Tmall IOT/ TUYA IOT, Xiaomi IOT subject to purchase version).

2、Authentic music, weather inquiry, children's stories, crosstalk sketches, opera, etc.

3、Capacitive full screen touch, 6 "IPS display,1440*720 resolution.
4、Music playback: Support MP3, WAV, WMA, FLAC, DTS, APE, AC3, OGG and other audio formats
5、Bluetooth: Support to search for connected Bluetooth speakers or mobile phones to search for connected hosts (depending on the version purchased).
6、External sound input: Support external sound source input to the machine, enlarge the output.
7、Time calendar: Supports clock and calendar display functions.
8、Set function: Set host functions.
9、Memory card function: external TF card, support 32GB TF card.
10、USB function: External USB card, support 32GB USB
11、Multiple loop play modes: Support single play, random play, order play, single loop, all loop play mode.
12、Volume adjustment: 20-level electronic volume adjustment function.
13、Screen saver display time function: After setting screen saver, screen saver can display public, lunar calendar, week, time.
14、Supports power-on and startup.
15、Supports online firmware upgrade.
16、Built-in WIFI wireless connection.
17、485: Can support external input control, can also output control external intelligent devices.
18、Speaker switching: this host supports the size of the speaker switching, can use its own large speaker and small speaker.

Support knob to adjust lights, curtains, volume, etc

Chapter 3 Interface and specification parameters

3.1 Function interface and description

Version 1: Relay version

Intelligent music central control host

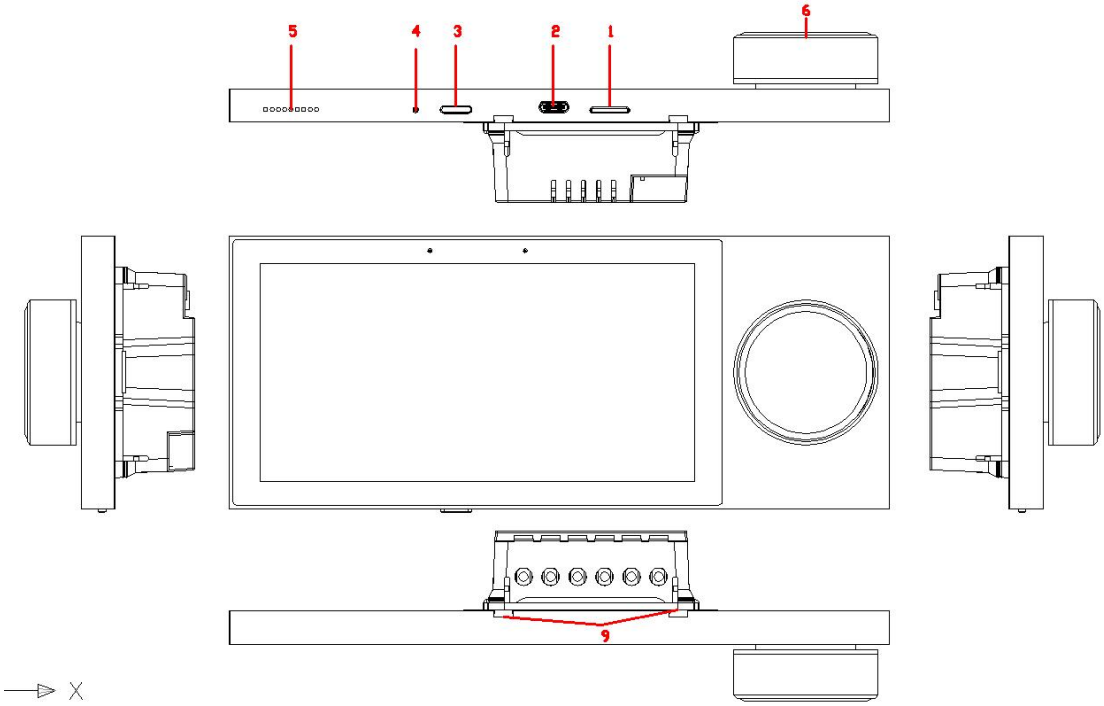

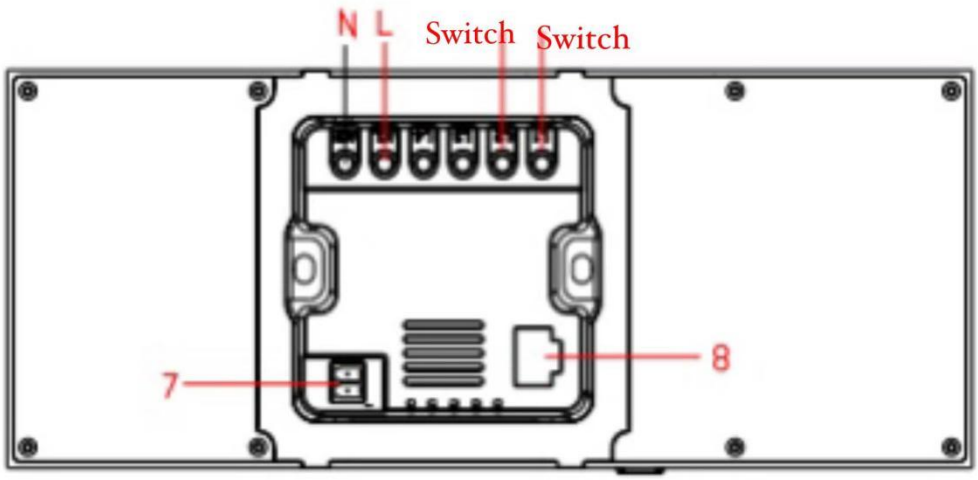

External interface description

1、TF card: read TF card interface.

2、TYPE-C USB: external USB, with conversion cable can read U disk; Upgrade.

3、Button: short press the lock screen/light screen; Press and hold to power off/restart.

4、Upgrade key: Standby upgrade key port.

5、With speaker sound hole

6、Knob: press to switch equipment. Rotate to adjust light brightness, curtains, air conditioning, volume, etc.

7、485: connected to 485A 485B through the external device to control the

background music, you can also control other 485 devices through the machine.

8、Ethernet port: Supports wired network.

9、Disassembly mouth: disassemble the shell fixing screw pry open gap

L Live line input N Neutral line input, L1 L2 is 2 for the switch control line respectively connect the corresponding light live line output (based on the actual host access)

Version 2: Background music version

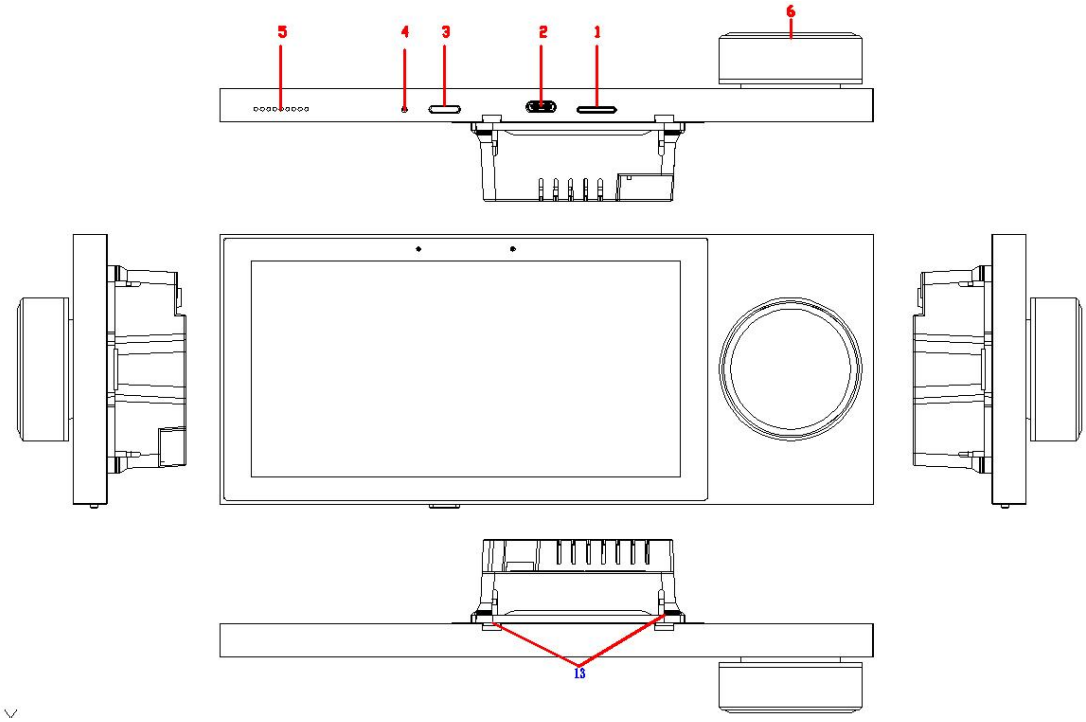

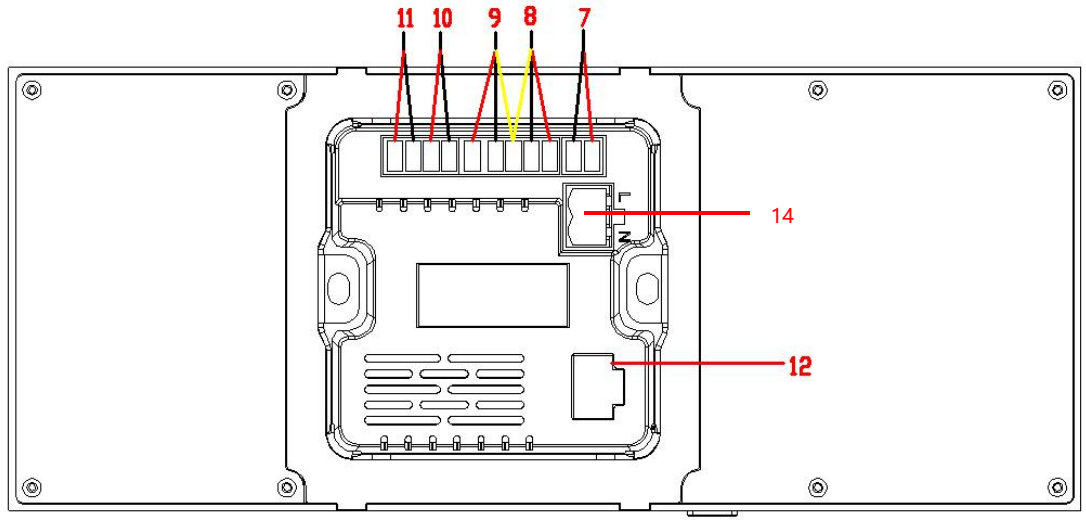

External interface description

1、TF card: read TF card interface.

2、TYPE-C USB: external USB, with conversion cable can read U disk; Upgrade.

3、Button: short press the lock screen/open screen; Press and hold to power off.
4、Upgrade key: Standby upgrade key port.
5、With speaker sound hole
6、Knob: press to switch equipment. Rotate to adjust light brightness, curtains, air conditioning, volume, etc.
7、485: connected to 485A 485B can control the background music through external devices, and can also control other 485 devices through the machine.
8、Audio input cable: audio cable (three-core shielded cable: commonly known as microphone cable), RVVP2X0.5, RVVP2X0.75, connected with AUX L+AUX R+GND.
9、Audio output: audio cable (three-core shielded cable: commonly known as microphone cable), RVVP2X0.5, RVVP2X0.75, connected to OUT R +OUT L+GND, can be connected to other power amplifier.
10、Speaker: speaker wire (200 core), RVH2X100, RVH2X200 SPK L+ SPK L-.
11、Speaker: speaker wire (200 core), RVH2X100, RVH2X200 SPK L+ SPK L-.
12、Ethernet port: support wired network.
13、Disassembly mouth: disassemble the shell fixing screw pry open gap
14、Power supply terminal: Connect AC 90V-240V power supply.

Chapter 4 Installation instructions

● Turn off the main power switch, and confirm that the fire line in the cassette is not live with the measuring pen.

● Remove the back seat and install it in the cassette (as shown).

● Check the wiring to ensure that the copper wire is in good contact with the terminal post, and there are no exposed wires.

● Secure the base to the inside of the cassette with mounting screws and fasten back the panel.

● Note that the screws should not be tightened too tightly during installation, so as not to cause deformation or damage to the screen and hardware.

● If the installation encountered problems, must not vigorously press forced installation, should first level the wall, check the support.

● Embedded bottom box provided, bottom box installation size: standard 86 boxes deepened;

● Wire used in this product: multi-strand copper wire, coaxial line, audio line, audio line

4.1 Installation instruction

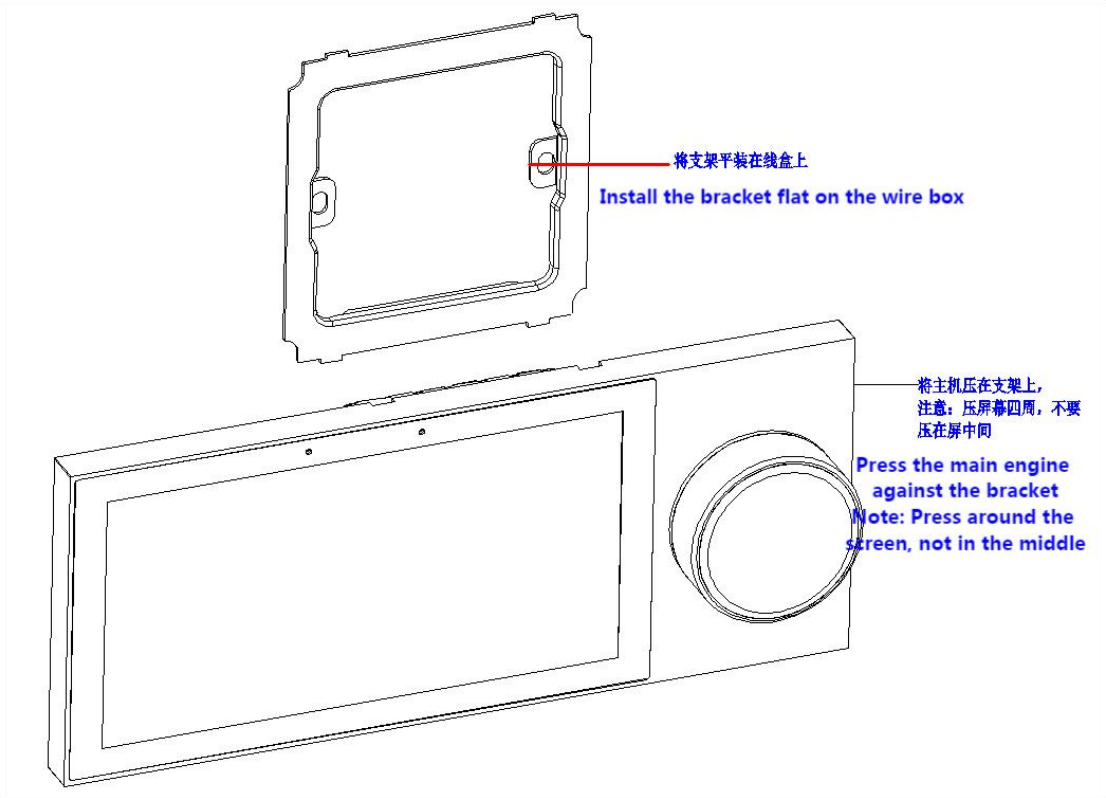

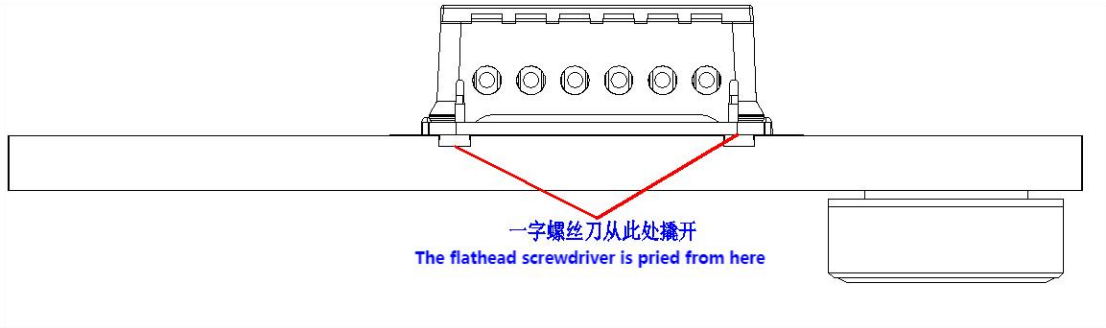

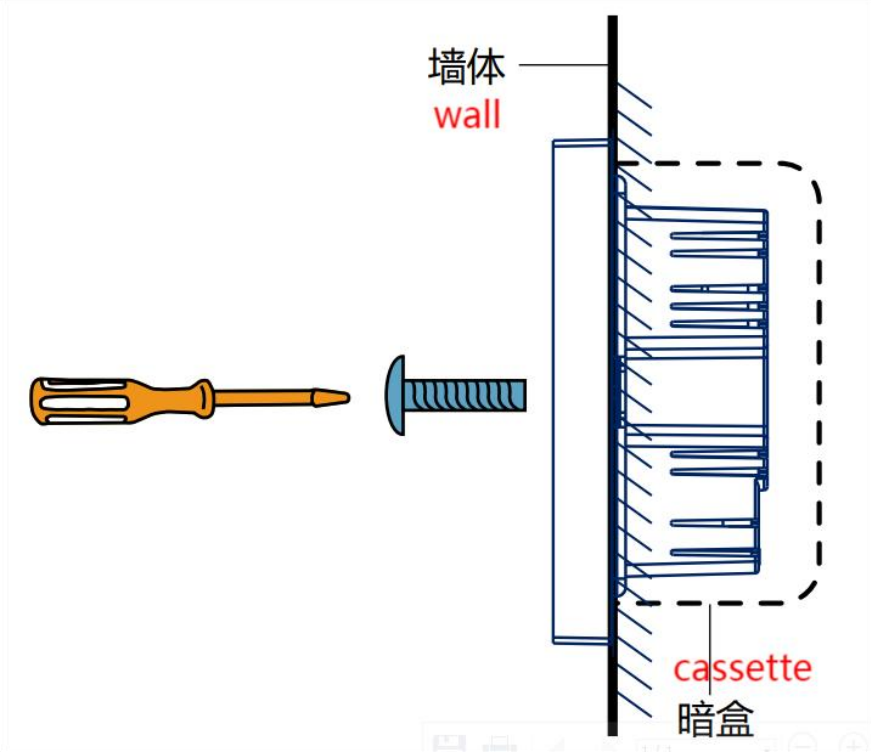

Suitable for JB/T 8593 standard plastic cartridges, cartridges depth ≥50mm.

Product installation reference dimension diagram

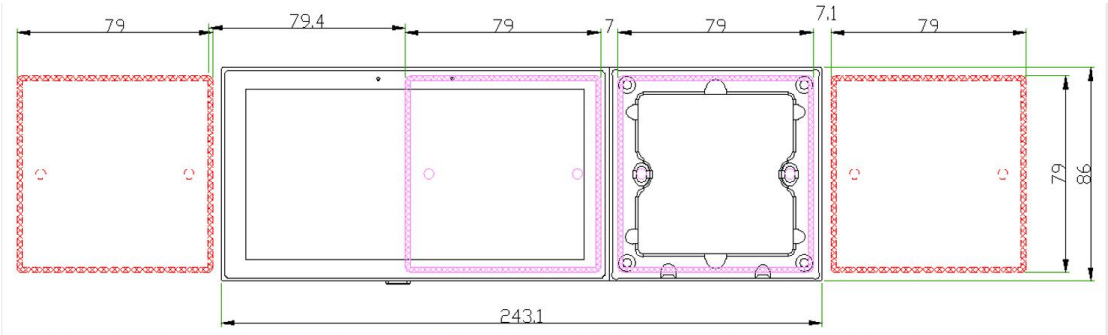

Chapter 5 Basic usage instructions

5.1 Safety instruction*****

- In order to ensure proper use of this product, this product must be installed or disassembled by a professional electrician.
- Before installing or disassembling this product, the main power brake must be

cut off to prevent electric shock.

- This product should be kept away from fire and water sources during installation and use.
- This product should not be used in humid environments (such as bathrooms).
- At present, the device does not support PoE power supply. Do not insert the PoE network cable into the network port to avoid burning the device.

5.2 Product operation instructions* Please refer to the firmware of TUYA Chinese version for reference

5.2.1 After the product is powered on, it automatically starts up. For the first time, slide down from the top of the main screen to enter the **device interface - Network Settings**

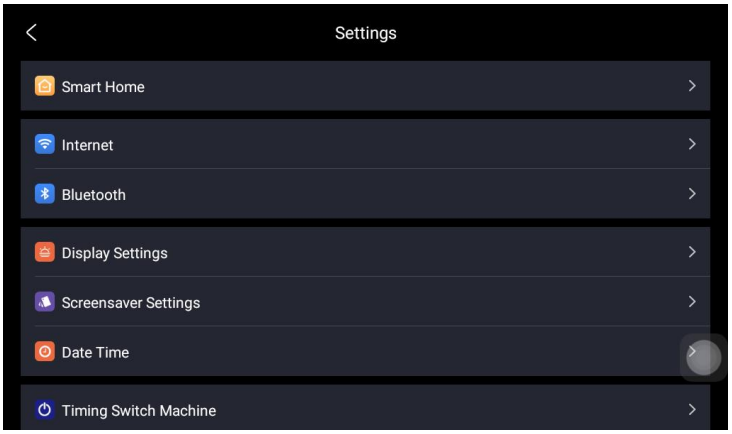

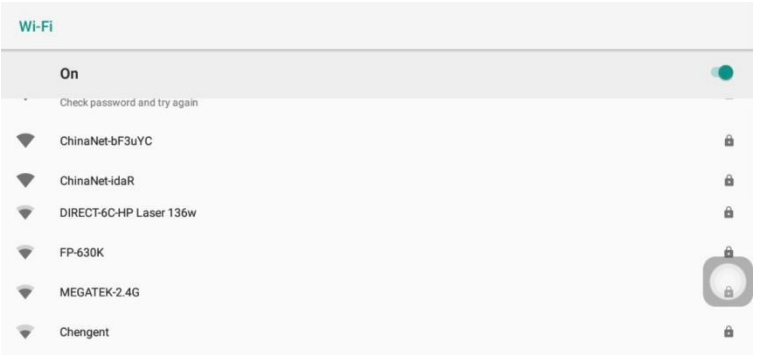

5.2.1 In the **Internet setting** interface, you can choose wired or wireless connection.

Intelligent music central control host

After successful connection, it will automatically jump to the binding interface of "TUYA Smart APP"

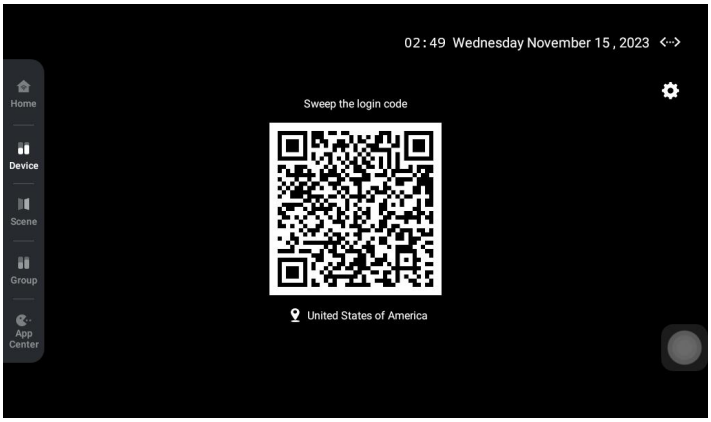

5.2.2 Open "TUYA Smart APP", go to the home page, select " + " in the upper right corner, continue to select "⊡" in the upper right corner.

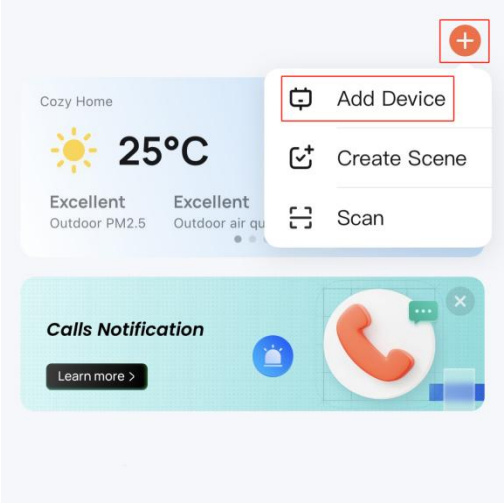

Intelligent music central control host

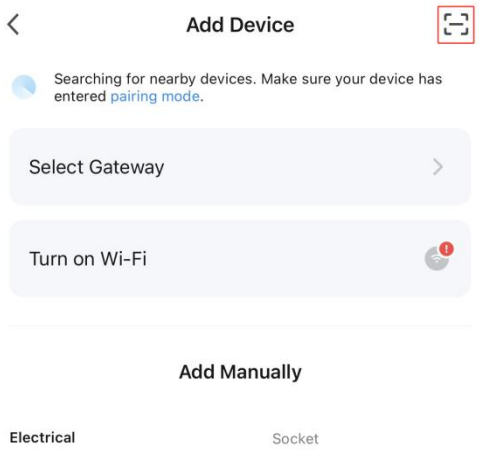

5.2.3 Scan the QR code on the product screen and start binding the device (the binding process takes about 30 seconds).

After the device is successfully bound, “Multi-Function Central Control” is displayed on the APP screen.

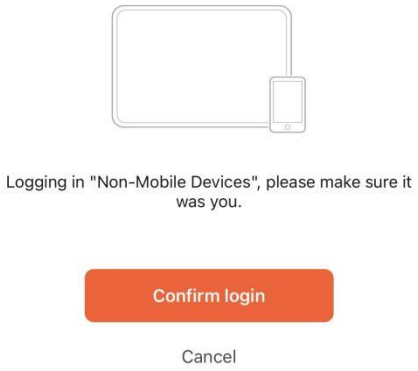

Intelligent music central control host

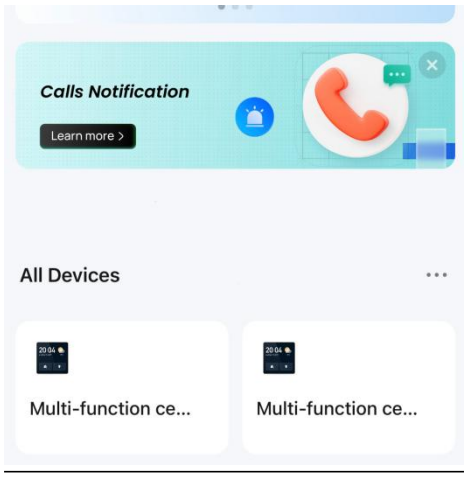

5.2.4 Enter the "Multi-function central control" interface, you can see "Gateway" and "Switch" , Click the "Switch" icon to start controlling the local 2 street light control **(single load <200W)**, gray indicates the light is off, orange indicates the light is on.

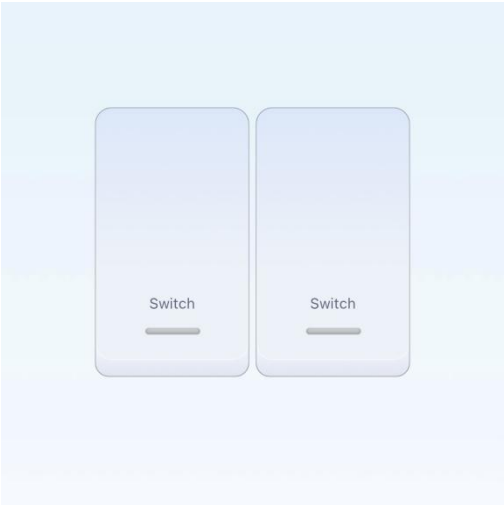

Intelligent music central control host

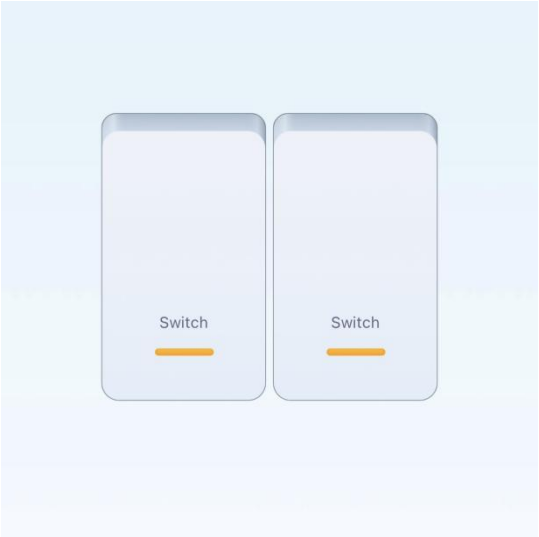

Long press "Switch 1" or "Switch 2" to customize the switch name, such as "living room light", "porch light", etc.

5.2.5 Click the ‘’ Gateway ‘’ icon to start ‘’ Added equipment ‘’ .

Intelligent music central control host

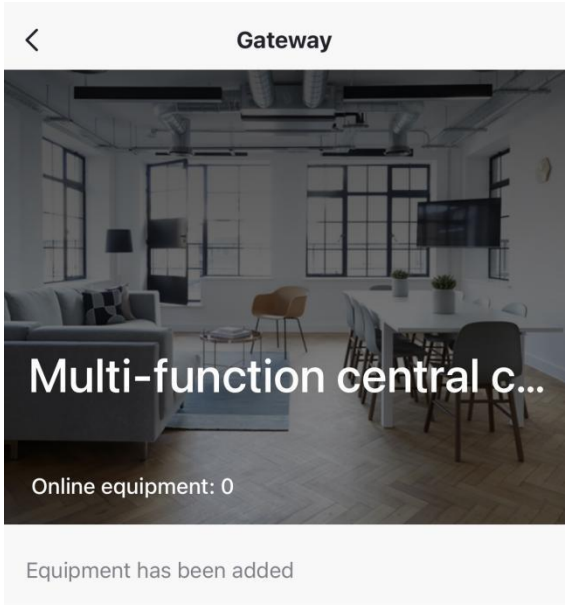

Set the child device that needs to be added to the gateway to "distribution network mode" and wait for the gateway to search and network automatically. For details, see the sub-device instruction manual (Generally, hold down the key for 5S or hold down the RESET key for 5S, and the LED indicator blinks, indicating that the sub-device enters the distribution mode).

The APP screen prompts the child device to enter the power distribution network mode and confirm that the indicator is blinking quickly!

Intelligent music central control host

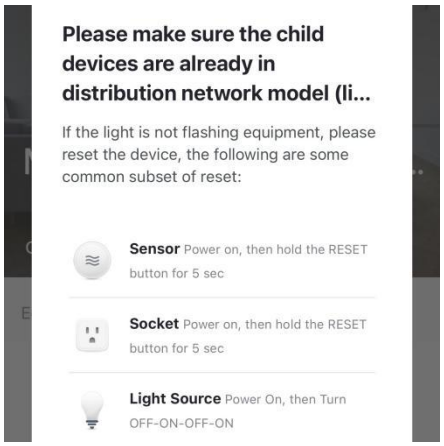

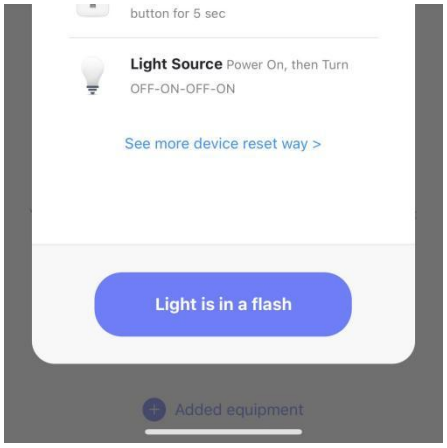

5.2.6After the sub-device is successfully added, the following information is displayed (**using the two-way touch switch as an example**). Click 'Finish'.

5.2.7 After the sub-device is successfully added, you can customize the switch name, such as "living room switch" and "bedroom switch", which will be displayed on the APP interface. After the addition, data will be synchronized on the host end.

Intelligent music central control host

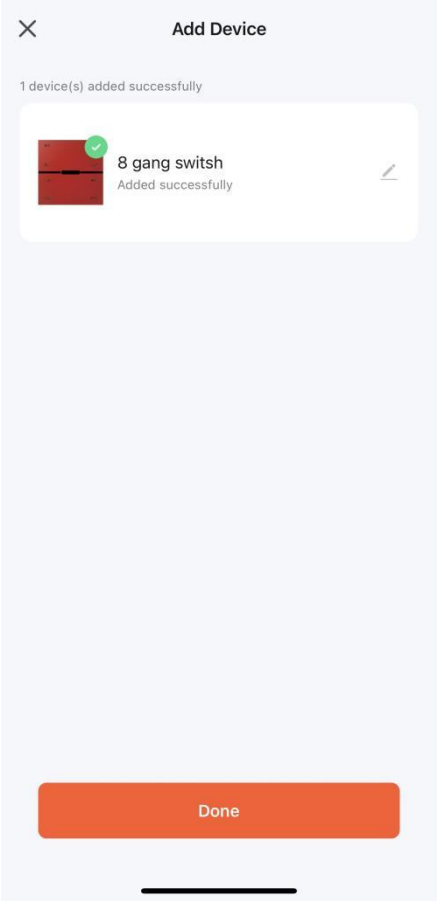

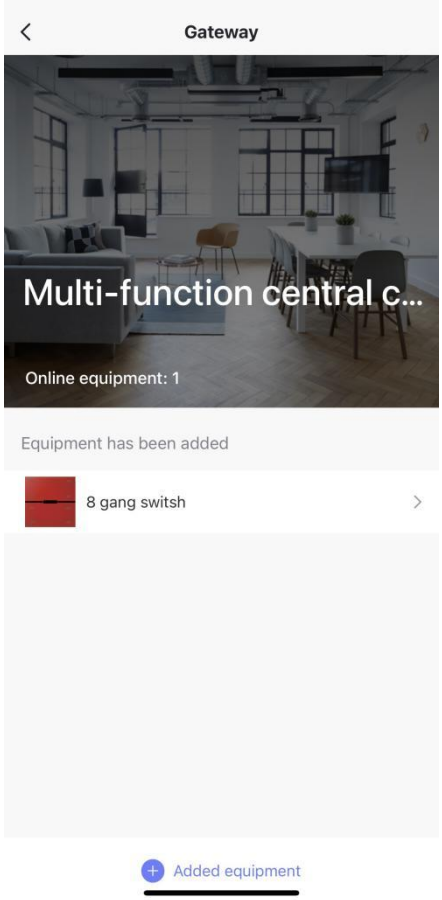

5.2.8 After entering the "two-way touch switch" interface, you can customize the switch type, such as "living room spotlight" "living room downlight", etc., gray indicates that the light is off, orange indicates that the light is on, and you can also control the switch regularly to realize the automation of lighting equipment.

Intelligent music central control host

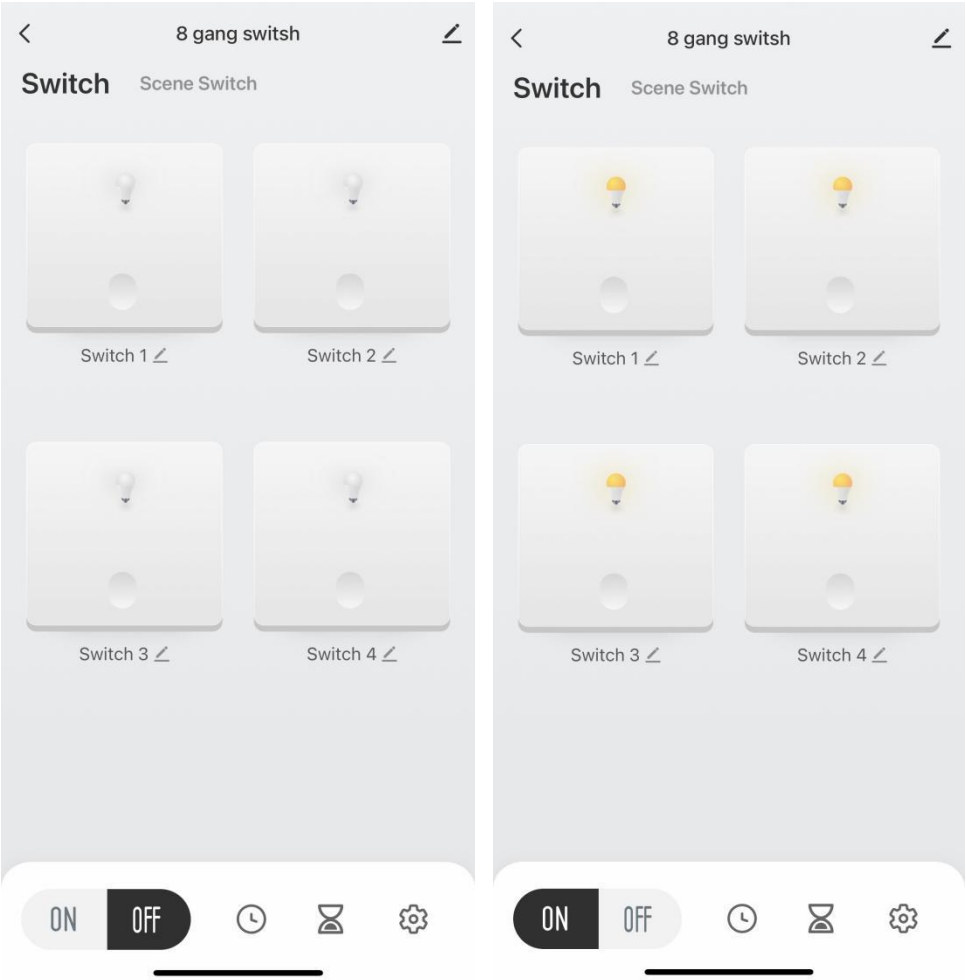

Chapter 6 Warranty description

Product warranty card

1、Userinfo

Name: ..... Phone: .....

Email: ..... Address: .....

2、Product information

Product information: ..... Model: .....

Date of production: .....

3、Information of the seller

Name: ..... Phone: .....

Time for selling: .....

4、Maintenance details

Time for selling: ..... Delivery time: .....

Maintenance record: ..... Failure description: .....